MAGNETICS®
A Division of Spang & Company

Specification for:

# PCB4229L1

110 Delta Drive
Pittsburgh, PA 15238
Phone: 412/696-1333
Fax: 412/696-0333
Email:magnetics@spang.com

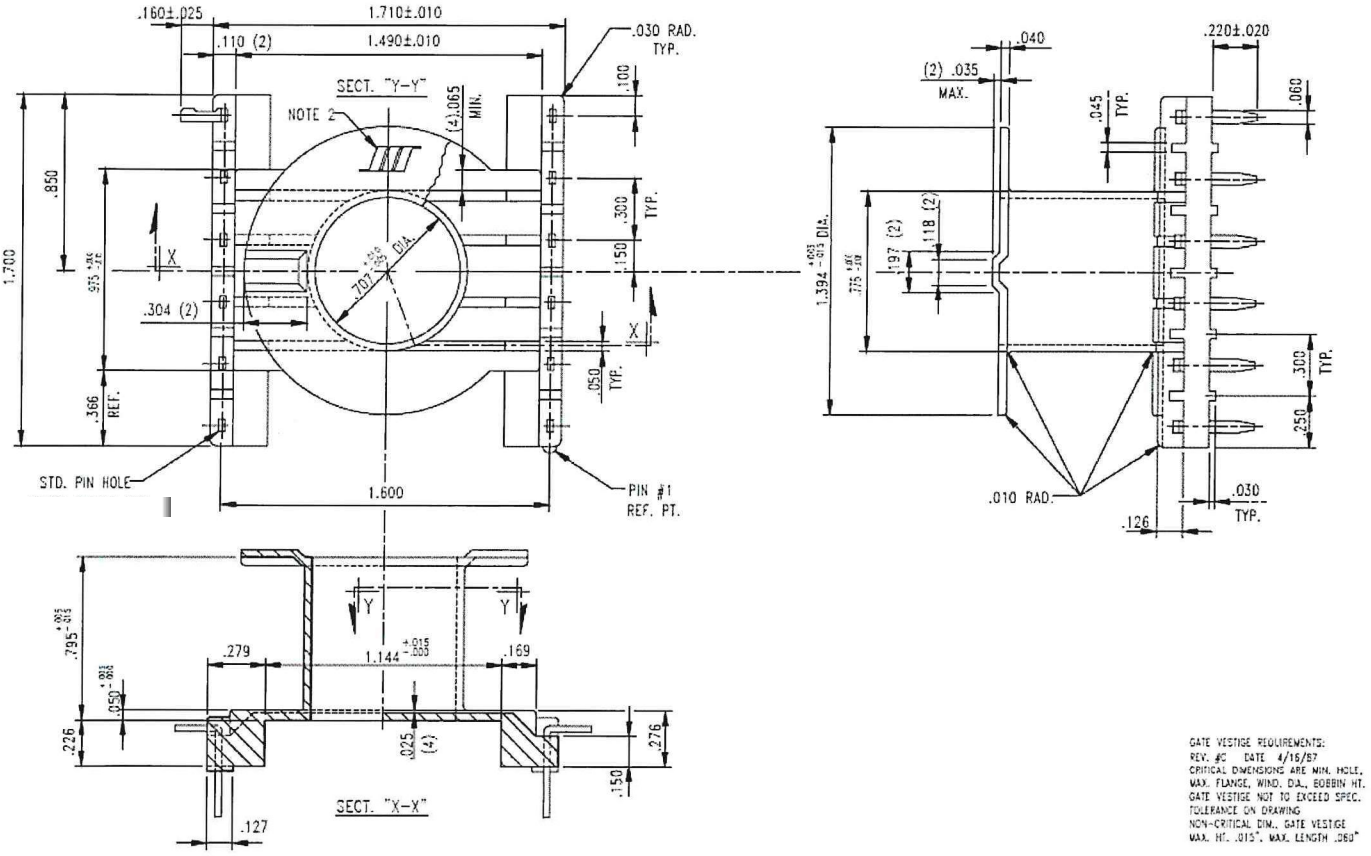


GATE VESTIGE REQUIREMENTS:
REV. #C DATE 4/15/87
CRITICAL DIMENSIONS ARE MIN. HOLE, MAX. FLANGE, WIND. DIA., BOBBIN HT.
GATE VESTIGE NOT TO EXCEED SPEC. TOLERANCE ON DRAWING
NON-CRITICAL DIM., GATE VESTIGE MAX. HT. .015", MAX. LENGTH .060"

## MATERIAL

DuPont Rynite FR530
UL File Number E41938

## REMARKS

Revision F