Specification for:

# PCB4040FA

110 Delta Drive
Pittsburgh, PA 15238
Phone: 412/696-1333
Fax: 412/696-0333
Email:magnetics@spang.com

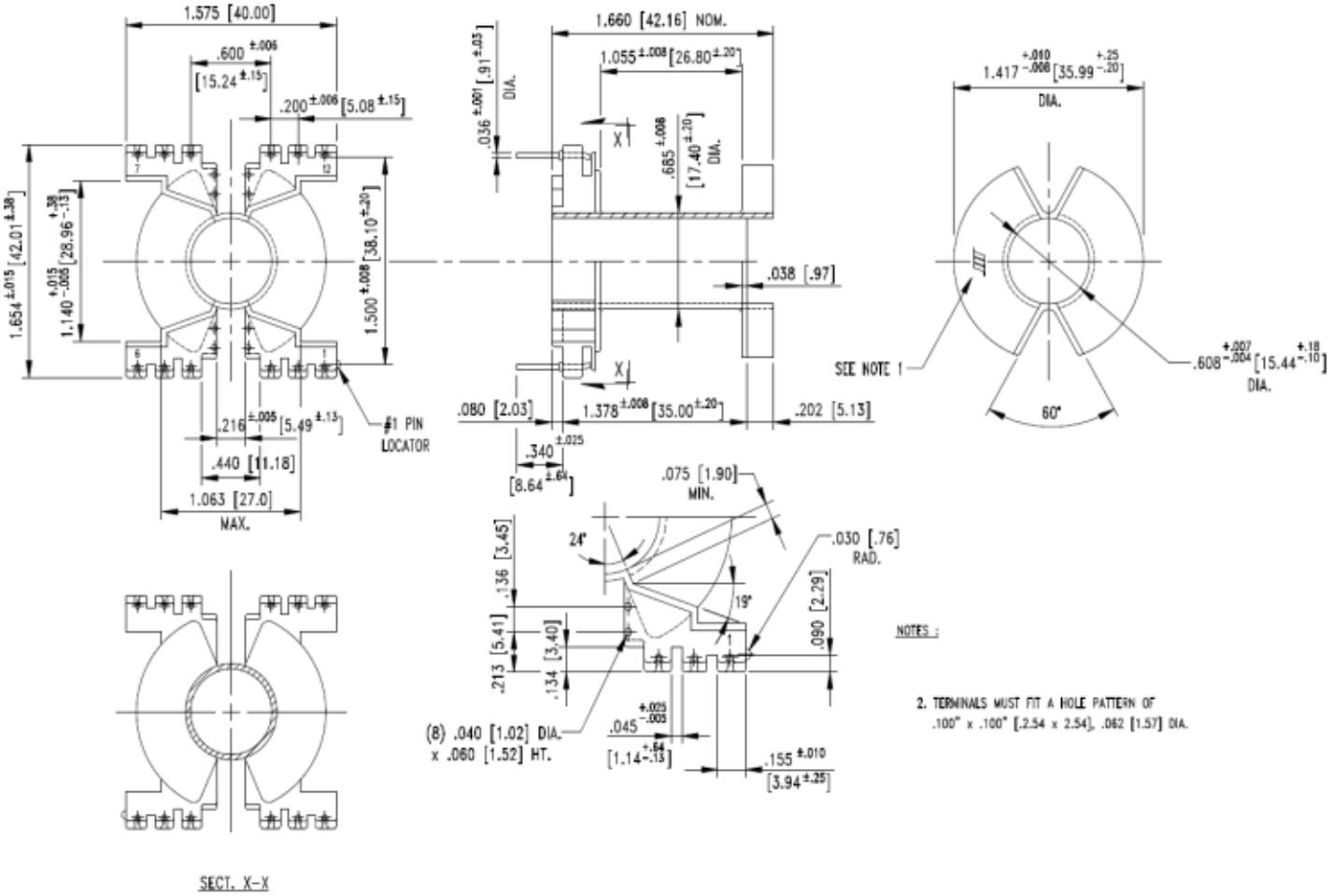


## MATERIAL

| |
|---|
| Bobbin Material: DuPont Rynite FR530; UL 94 V-0 |

## REMARKS

| |
|---|
| PQ 40/40 PC BOBBIN<br>Revision B |

Revision 10/10/2013